12 Nov 2003

PediTree Royal03 normal tree
DescTree C for 5 generations from George VI ^P062

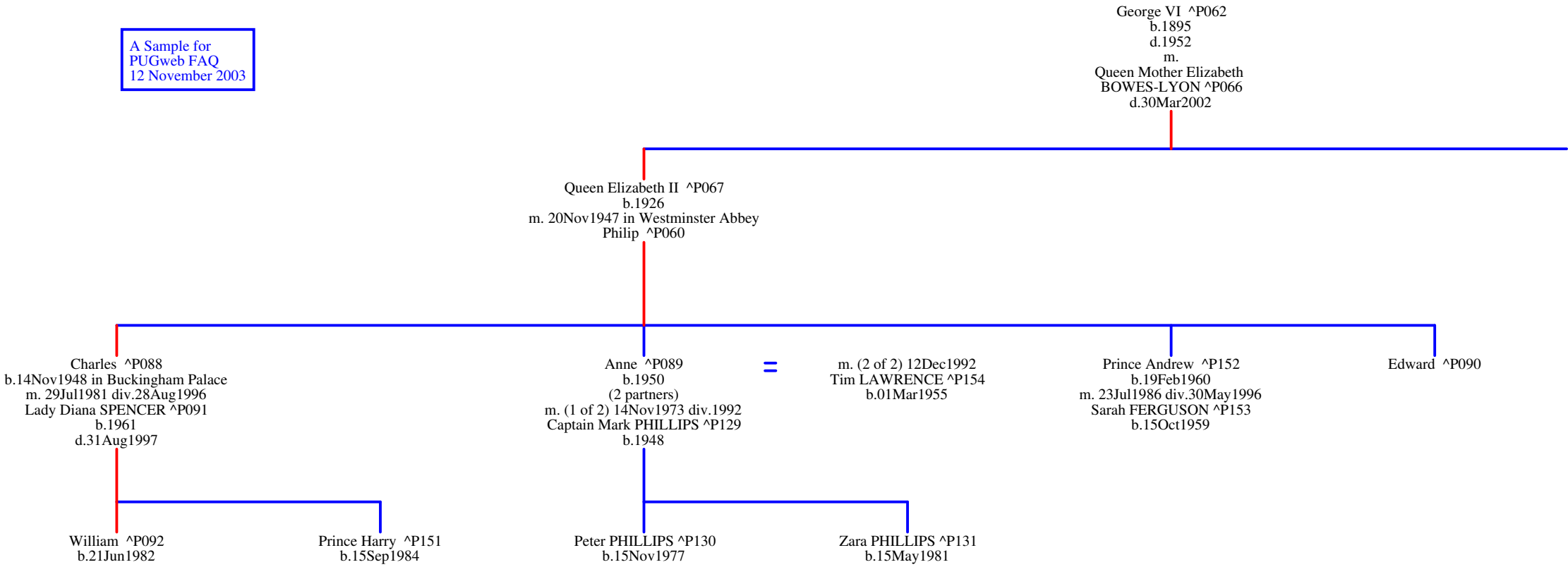

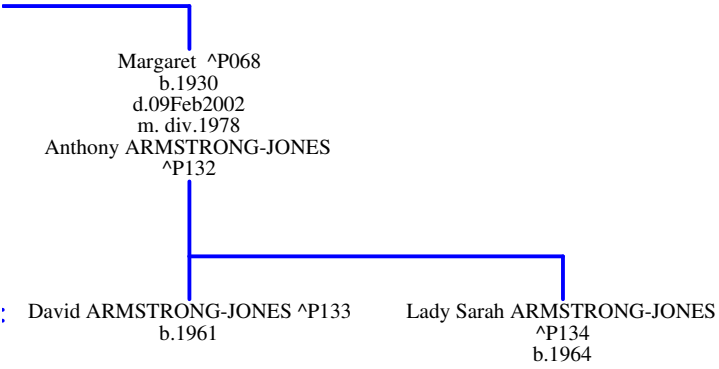
Margaret ^P068
b.1930
d.09Feb2002
m. div.1978
Anthony ARMSTRONG-JONES
^P132
David ARMSTRONG-JONES ^P133
b.1961
Lady Sarah ARMSTRONG-JONES
^P134
b.1964